00 FORM 1 APR 54 1176

B5013193

NOTICE — When Government drawings, specifications, or other data are used for any purpose other than in connection with a definitely related Government procurement operation, the United States Government thereby incurs no responsibility nor any obligation whatsoever; and the fact that the Government may have formulated, furnished, or in any way supplied the said drawings, specifications, or other data is not to be regarded by implication or otherwise as in any manner licensing the holder or any other person or corporation, or conveying any rights or permission to manufacture, use, or sell any patented invention that may in any way be related thereto.

REVISIONS			
SYM	DESCRIPTION	DATE	APPROVAL
5	← →	10AUG43	
A	REDRAWN AND REVISED WAS "A" SIZE, SEE EO SA 26316	27NOV62	
B	(1-6) SEE EO RIA-13876	12-30-66	
C	(2) SEE ERR HQR 30687-2	19JUN73	
D	SEE ERR HQR 50605	10FEB75	
E	REDRAWN W/CHANGE NOR W4S2049/840719 (ECP W4S2067/841224)	870621	

NOTES:

1. FINISH ALL OVER 125/ (B1)

2. HEAT TREATMENT: CARBURIZE TO CASE DEPTH .002 TO .005. OIL OR WATER QUENCH. TEMPER AT 350°F FOR 20 MINUTES AT HEAT. HEAT TREATMENT METHOD IS FOR GUIDANCE, EXCEPT THAT CASE DEPTH AND HARDNESS REQUIREMENTS ARE MANDATORY AND TIME AT TEMPERATURE SHALL NOT BE REDUCED BELOW THAT SPECIFIED. THE USE OF STRAIGHT CYANIDE BATH OR CARBO-NITRIDING PROCESS SHALL NOT BE PERMITTED WITHOUT PRIOR APPROVAL OF THE CONTRACTING OFFICER.

3. FINISH 5.3.1.2 OR 5.3.2.2 OF MIL-STD-171. (B4)

4. MIL-W-13855 APPLIES. (D) (C)

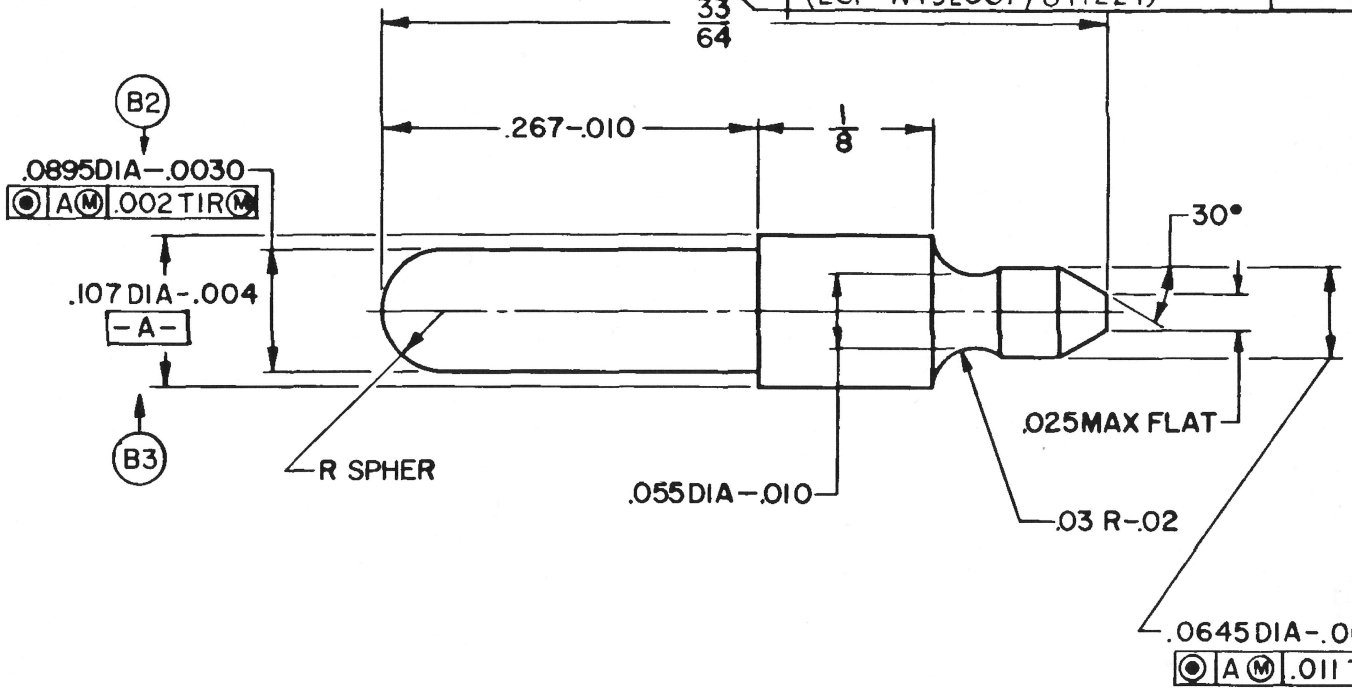

CURRENT DESIGN ACTIVITY CAGE CODE 19200
U.S. ARMY
ARMAMENT RESEARCH, DEVELOPMENT AND ENGINEERING CENTE
PICATINNY ARSENAL, NEW JERSEY 07806-5000

CAGE CODE 19205

PART NO. 5013193

(B5)

		PHYSICAL PROPERTIES	
F7791205	PISTOL, M911A1	YP	
	NATL MATCH	TS	
F7265655	PISTOL, M911A1	EL2	
F12006306	PISTOL, M15	RA	
NEXT ASSY	USED ON	BH	
APPLICATION		RH	15N
DO NOT ~~DO~~	APPLY PART NO. ~~AS SPECIFIED~~		78-82

UNLESS OTHERWISE SPECIFIED
DIMENSIONS ARE IN INCHES
TOLERANCES ON FRACTIONS ±1/64 DECIMALS ANGLES ±1°
MATERIAL: STEEL, CARBON SAE 1117, ASTM A108
HEAT TREATMENT SEE NOTE 2
FINAL PROTECTIVE FINISH SEE NOTE 3

ORIGINAL DATE OF DRAWING 1 MAY 28
DRAFTSMAN G.S.S. CHECKER S.S.C.
TRACER CHECKER
ENG
SUBMITTED ORD CORPS
APPROVED BY ORDER OF THE CHIEF OF ORDNANCE LT COL ORD CORPS

PLUNGER, SLIDE STOP

SCALE 10/1 UNIT WT .0008 LB

DEPT OF THE ARMY
SPRINGFIELD ARMOR
SPRINGFIELD, MASS

DWG SIZE B 5013193
SHEET 1 OF 1

RMH

DD FORM 1 APR 54 1176

B5013194

REVISIONS			
SYM	DESCRIPTION	DATE	APPROVAL
B	← →	18 MAY 49	
A	REDRAWN AND REVISED WAS "A" SIZE, SEE EO SA 26316	27 NOV 62	
D	(3) SEE ERR HQR 30687-2	19 JUN 73	E. Winter
C	REDRAWN W/CHANGE NOR W4S2049/840719 (ECP W4S2067/841224)	870621	

NOTES:

1. MANUFACTURE IN ACCORDANCE WITH TYPE I, GRADE A, MIL-S-13572.

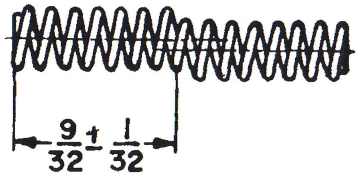

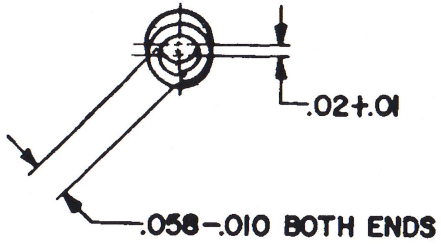

DIAMETER OF WIRE ..... .018
DIAMETER OF COIL (OD) ..... .104 ±.003
FREE LENGTH ..... .593 REF
ACTIVE COILS ..... 12.5 REF
TOTAL COILS ..... 14.5 REF
DIRECTION OF HELIX ..... LH
LOAD AT COMPRESSED LENGTH OF ..... .400 = 2.500 LB ±0.500 LB
LOAD AT COMPRESSED LENGTH OF ..... = LB ± LB
SPRING RATE ..... .160 LB/IN REF
SOLID LENGTH ..... .279 MAX
TYPE OF ENDS ..... SQUARED AND GROUND

SPECIAL DATA

HOLE DIA INTO WHICH SPRING FITS FREELY ..... .109 MIN
ROD DIA OVER WHICH SPRING SLIDES FREELY ..... MAX

CURRENT DESIGN ACTIVITY CAGE CODE 19200
U.S. ARMY
ARMAMENT RESEARCH, DEVELOPMENT AND ENGINEERING CENTER
PICATINNY ARSENAL, NEW JERSEY 07806-5000

(USED WITH PLUNGERS 5013193 AND 5013195)

PART NO. 5013194

CAGE CODE 19205

B

		PHYSICAL PROPERTIES	
F7791205	PISTOL, M1911A1	YP	
	NATL MATCH	TS	
F7265655	PISTOL, M1911A1	EL2	
F12006306	PISTOL, M15	RA	
NEXT ASSY	USED ON	BH	
APPLICATION			
DO NOT	APPLY PART NO.	RH	

UNLESS OTHERWISE SPECIFIED
DIMENSIONS ARE IN INCHES
TOLERANCES ON FRACTIONS DECIMALS ANGLES
MATERIAL: MUSIC WIRE, STEEL, FED. SPEC QQ-W-470
HEAT TREATMENT STRESS RELIEVE AT 450° FOR 20 MIN, AFTER FORMING
FINAL PROTECTIVE FINISH

ORIGINAL DATE OF DRAWING 1 MAY 28
DRAFTSMAN G.S.S. CHECKER M.E.K.
TRACER R.P.P. CHECKER R.J.S.
ENGR H.E.S. ENGR
SUBMITTED W. Lundkomen ORD CORPS
APPROVED BY ORDER OF THE CHIEF OF ORDNANCE, J.C. Hubby LT COL ORD CORPS

SPRING, PLUNGER

SCALE 4/1 UNIT WT .0002 LB

DEPT OF THE ARMY
SPRINGFIELD ARMORY
SPRINGFIELD, MASS.

DWG SIZE B 5013194

SHEET 1 OF 1

RMH

FORM 1 APR 54 1176

B5013195

REVISIONS			
SYM	DESCRIPTION	DATE	APPROVAL
B	← →	12MAR52	
A	REDRAWN AND REVISED WAS "A" SIZE, SEE EO SA 26316	27NOV62	
B	(3) SEE ERR HQR 30687-2	19JUN73	
C	NORW3S2067/83-12-21	84-06-04	
D	REDRAWN W/CHANGE NOR W4S2049/840719 (ECP W4S2067/841224)	870621	

NOTES:

1. FINISH 125
2. HEAT TREATMENT: CARBURIZE TO CASE DEPTH .002 TO .005. OIL OR WATER QUENCH. TEMPER 350°F FOR 20 MINUTES AT HEAT. HEAT TREATMENT METHOD IS FOR GUIDANCE, EXCEPT THAT CASE DEPTH AND HARDNESS REQUIREMENTS ARE MANDATORY AND TIME AT TEMPERATURE SHALL NOT BE REDUCED BELOW THAT SPECIFIED.
3. STEEL, CARBON; SAE 1117; ASTM A108
4. MIL-W-13855 APPLIES. (B)
5. FINAL PROTECTIVE FINISH: FINISH 5.3.1.2 OF MIL-STD-171.

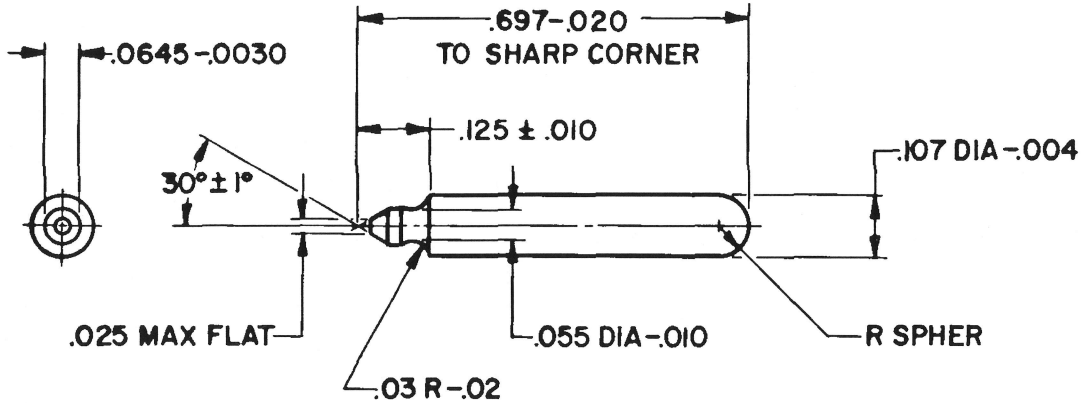

CURRENT DESIGN ACTIVITY CAGE CODE 19200
U.S. ARMY
ARMAMENT RESEARCH, DEVELOPMENT AND ENGINEERING CENTER
PICATINNY ARSENAL, NEW JERSEY 07806-5000

PART NO. 5013195

CAGE CODE 19205

(B)

		PHYSICAL PROPERTIES	
F7791205	PISTOL, M1911A1	YP	
	NATL MATCH	TS	
F7265655	PISTOL, M1911A1	EL2	
F12006306	PISTOL, M15	RA	
NEXT ASSY	USED ON	BH	
APPLICATION		RH	15N
DO NOT ~~DO~~	APPLY PART NO. ~~AS SPECIFIED~~		78-82

UNLESS OTHERWISE SPECIFIED
DIMENSIONS ARE IN INCHES
TOLERANCES ON FRACTIONS DECIMALS ANGLES

MATERIAL: SEE NOTE 3

HEAT TREATMENT: SEE NOTE 2

FINAL PROTECTIVE FINISH SEE NOTE 5

ORIGINAL DATE OF DRAWING 1 MAY 28

DRAFTSMAN G.S.S. CHECKER L.S.C.
TRACER R.P. CHECKER
ENGR ENGR
SUBMITTED ORD CORPS
APPROVED BY ORDER OF THE CHIEF OF ORDNANCE LT COL ORD CORPS

PLUNGER, SAFETY LOCK

SCALE 4/1 UNIT WT .0014 LB

DEPT OF THE ARMY
SPRINGFIELD ARMORY
SPRINGFIELD, MASS

DWG SIZE B 5013195

SHEET 1 OF 1

00 FORM 1 APR 54 1176

NOTICE — When Government drawings, specifications, or other data are used for any purpose other than in connection with a definitely related Government procurement operation, the United States Government thereby incurs no responsibility nor any obligation whatsoever, and the fact that the Government may have formulated, furnished, or in any way supplied the said drawings, specifications or other data is not to be regarded by implication or otherwise as in any manner licensing the holder or any other person or corporation, or conveying any rights or permission to manufacture, use, or sell any patented invention that may in any way be related thereto.

B5013198

REVISIONS			
SYM	DESCRIPTION	DATE	APPROVAL
4	← →	18 MAY49	
A	REDRAWN AND REVISED WAS "A" SIZE, SEE EO SA 26316	27NOV62	V.W. Grant
B	(1-2) SEE EO RIA-14039	3-14-67	[illegible]
C	(2) SEE ERR HQR 30687-2	19JUN73	E. Winter
D	NORWOS2002 81-02-26	82-01-15	[illegible]

NOTES:

1. FINISH 125/
2. ALL EDGES SHALL BE BROKEN .005+.010 UNLESS OTHERWISE SPECIFIED.
3. MATERIAL: STEEL, SPEC ASTM A684, 1075. AUSTENITIC GRAIN SIZE 7 OR FINER.
4. AUSTENITIZE AT 1540° TO 1580° F IN NEUTRAL SALT OR ATMOSPHERE. QUENCH IN AUSTEMPERING SALT AT APPROXIMATLY 640° F. HOLD FOR 30 MINUTES. HEAT TREATMENT METHOD IS FOR GUIDANCE EXCEPT THAT TIME AT TEMPERATURE SHALL NOT BE REDUCED BELOW THAT SPECIFIED.
5. FINISH 5.3.1.2 OF MIL -STD-171.

ALL SURFACES SHALL BE COATED WITH A FILM OF OIL. WEIGHT PER UNIT AREA SHALL NOT APPLY. (C)

6. MIL-W-13855 APPLIES.

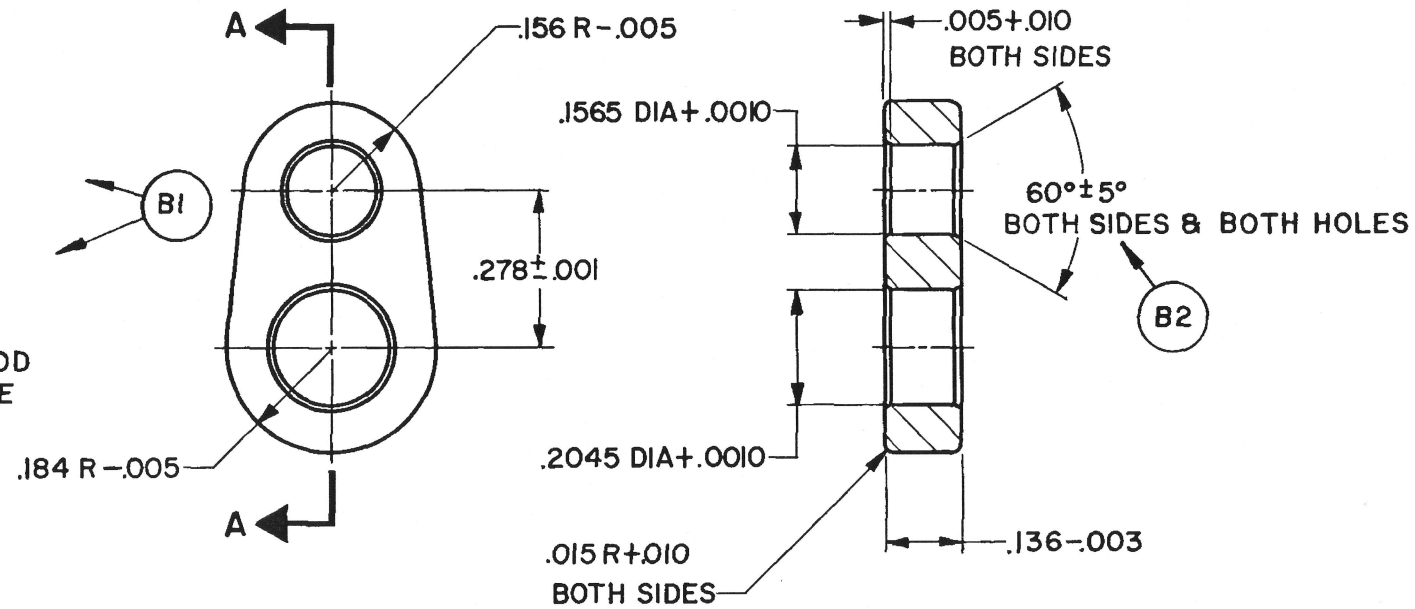

SECTION A-A

U S ARMY ARMAMENT RESEARCH AND DEVELOPMENT COMMAND
DOVER, NEW JERSEY 07801

CODE IDENT NO. ~~19204~~

PART NO. 5013198

CODE IDENT NO. 19200

(C)

		PHYSICAL PROPERTIES	
		YP	
		TS	
		EL2	
F12006306	PISTOL, M 15	RA	
F7265655	PISTOL, M911A	BH	
NEXT ASSY	USED ON		
APPLICATION		RH	C39.5 T046
DO NOT ~~DO~~	APPLY PART NO. ~~AS SPECIFIED~~		

UNLESS OTHERWISE SPECIFIED
DIMENSIONS ARE IN INCHES
TOLERANCES ON FRACTIONS DECIMALS ANGLES

MATERIAL: SEE NOTE 3

HEAT TREATMENT: SEE NOTE 4

FINAL PROTECTIVE FINISH: SEE NOTE 5

ORIGINAL DATE OF DRAWING 1 MAY 28

DRAFTSMAN F.C.L. CHECKER L.S.C.
TRACER R.A.P. CHECKER A.J.L.
ENGR E.Sigler ENGR V.W. Grant
SUBMITTED V.A. Lundkomer ORD CORPS
APPROVED BY ORDER OF THE CHIEF OF ORDNANCE S.C. Shultz LT COL ORD CORPS

LINK, BARREL

SCALE 4/1 UNIT WT .005 LB

~~ROCK ISLAND ARSENAL~~
~~DEPT OF THE ARMY~~
~~ROCK ISLAND, ILL 61201.~~

DWG SIZE B

5013198

SHEET 1 OF 1

RMH

FORM 1 APR 54 1176

NOTICE — When Government drawings, specifications or other data are used for any purpose other than in connection with a definitely related Government procurement operation, the United States Government thereby incurs no responsibility nor any obligation whatsoever; and the fact that the Government may have formulated, furnished, or in any way supplied the said drawings, specifications or other data is not to be regarded by implication or otherwise in any manner licensing the holder or any other person or corporation, or conveying any rights or permission to manufacture, use or sell any patented invention that may in any way be related thereto.

B5013199

REVISIONS			
SYM	DESCRIPTION	DATE	APPROVAL
4	← →	9 JUN 50	
A	REDRAWN AND REVISED WAS "A" SIZE, SEE EO SA 26316	27 NOV 62	N W Lewis
B	(3) SEE ERR HQR 30687-2	19 JUN 73	E Winter
C	(1) SEE ERR HQR 50605	10 FEB 75	J B Butterworth
D	REDRAWN W/CHANGE NOR W4S2049/840719 (ECP W4S2067/841224)	870621	[illegible]

NOTES:

1. FINISH 125√ ALL OVER.
2. HEAT TREATMENT: HEAT AT 1450° TO 1500°F; OIL QUENCH. TEMPER 20 MINUTES AT HEAT TO HARDNESS SPECIFIED. HEAT TREATMENT METHOD IS FOR GUIDANCE, EXCEPT THAT TEMPERING TIME SHALL NOT BE REDUCED BELOW THAT SPECIFIED.
3. FINISH 5.3.1.2 OF MIL-STD-171.
4. MIL-W-13855 APPLIES.

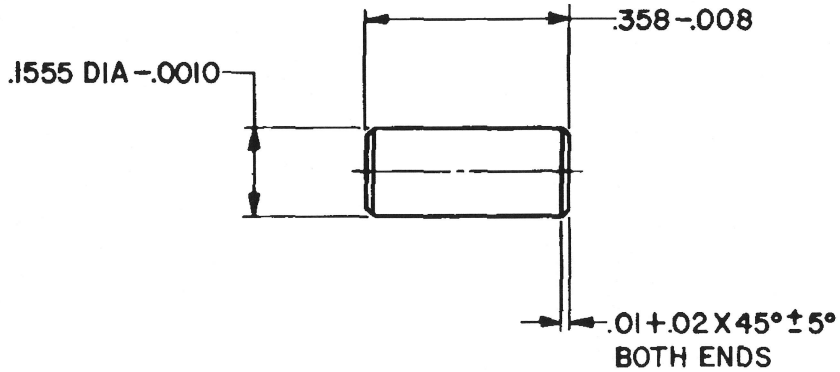

CURRENT DESIGN ACTIVITY CAGE CODE 19200
U.S. ARMY
ARMAMENT RESEARCH, DEVELOPMENT AND ENGINEERING CENTER
PICATINNY ARSENAL, NEW JERSEY 07806-5000

CAGE CODE 19205

PART NO. 5013199

F7791205	PISTOL, M911A1 NATL MATCH		
F7265655	PISTOL, M911A1		
F12006306	PISTOL, M15		
NEXT ASSY	USED ON		
APPLICATION			
DO NOT ~~DO~~	APPLY PART NO. ~~AS SPECIFIED~~		

PHYSICAL PROPERTIES	
YP	
TS	
EL2	
RA	
BH	
RH	C43.5 T050

UNLESS OTHERWISE SPECIFIED
DIMENSIONS ARE IN INCHES
TOLERANCES ON FRACTIONS DECIMALS ANGLES

MATERIAL: TOOL STEEL, DRILL ROD, SPEC QQ-T-580

HEAT TREATMENT: SEE NOTE 2

FINAL PROTECTIVE FINISH: SEE NOTE 3

ORIGINAL DATE OF DRAWING 1 MAY 28

DRAFTSMAN C.S.S. CHECKER L.S.C.
TRACER R.A.P. CHECKER A.G.L.
ENGR [illegible] ENGR [illegible]
SUBMITTED [illegible] ORD CORPS
APPROVED BY ORDER OF THE CHIEF OF ORDNANCE [illegible] LT COL ORD CORPS

PIN, BARREL LINK

SCALE 4/1 UNIT WT .0018 LB

DEPT OF THE ARMY
SPRINGFIELD ARMORY
SPRINGFIELD, MASS.

DWG SIZE B 5013199

SHEET 1 OF 1

REVISIONS				
ZONE	LTR	DESCRIPTION	DATE (YR MO DA)	APPROVI
	F	REDRAWN W/CHANGE NOR G7S3115/870820	901023	ORFI

NOTES:

1. FINISH 125 ✓ ALL OVER.
2. MATERIAL: STEEL, COLD DRAWN, SAE 1018 THRU 1025, OR 1018 ASTM A108.
3. HELICAL COMPRESSION SPRING OF .043 DIA WIRE, .430 O.D., .218 PITCH, SHALL ENTER FOR A MINIMUM DISTANCE OF 1/4 OF A COIL.
4. MIL-W-13855 APPLIES.
5. FINISH 5.3.1.2 OF MIL-STD-171.

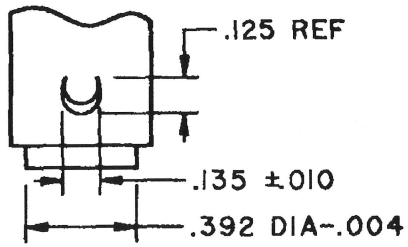

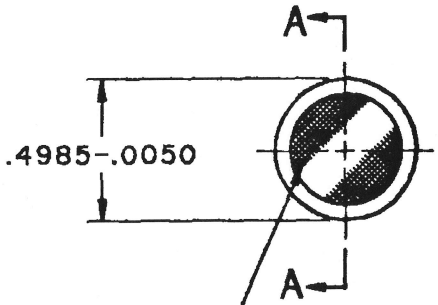

.039±.005 PITCH STRAIGHT OR DIAMOND KNURL PER ANSI B94.6-1981 SEE DETAIL B

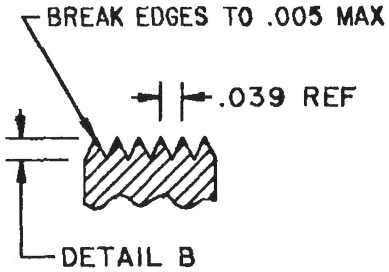

SCALE: 4/1

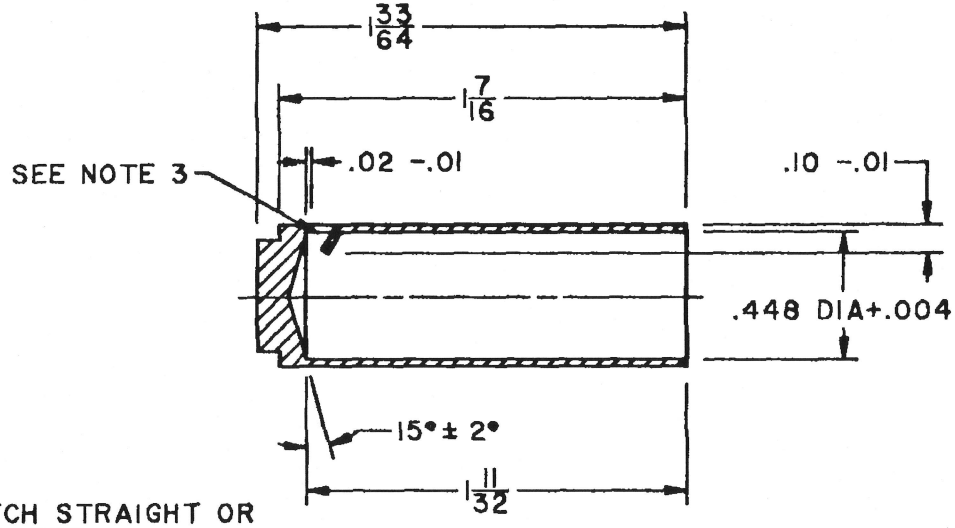

SECTION A-A

CURRENT DESIGN ACTIVITY CAGE CODE 19200
U.S. ARMY
ARMAMENT RESEARCH, DEVELOPMENT AND ENGINEERING CENTER
PICATINNY ARSENAL, NEW JERSEY 07806-5000

PART NO. 5013201

PMIC			DO NOT SCALE DRAWING
			UNLESS OTHERWISE SPECIFIED DIMENSIONS ARE IN INCHES
			TOLERANCES ON DECIMAL: 2 PL ±, 3 PL ±; FRACTION: ±1/64
MECHANICAL PROPERTIES	B12006323	PISTOL, M15	
YP	F7791205	PISTOL, M911A1	THIRD ANGLE PROJECTION
TS		NATL MATCH	
EL2	F7265655	PISTOL, M911A1	
RA	NEXT ASSY	USED ON	MATL ENGR
BH	APPLICATION		
RH			

CONTRACT NUMBER	
CONTRACTOR	
DRAWN BY E.R.C.	DATE(YR-MO-DA) 28-06-01
CHECKER K.H.S.	ENGINEER H.E.S.
DRAWING APPROVAL V. A. LUUKKONEN	
DESIGN APPROVAL S. C. SHULTZ	

DEPT OF THE ARMY
SPRINGFIELD ARMORY
SPRINGFIELD, MASS

PLUG, RECOIL SPRING

SIZE	CAGE CODE	
B	19205	5013201
SCALE 2/1	UNIT WT. .02 LB	SHEET 1 OF 1

SMCAR FORM 66, 1 MAR 88(TEMP) REPLACES SMCAR FORM 66, 1 JUL 87(TEMP) WHICH MAY BE USED UNTIL EXHAUSTED

FORM 1 APR 54 1176

B5013203

REVISIONS			
SYM	DESCRIPTION	DATE	APPROVAL
4	← →	9JUN50	
A	REDRAWN AND REVISED WAS "A" SIZE, SEE EO SA 26316	27NOV62	
B	(6) SEE ERR HQR 30687-1	23MAY73	
C	(1) SEE ERR HQR 50605	10FEB75	

NOTES:

1. FINISH 125 ✓ ALL OVER. (C)
2. HEAT TREATMENT: HEAT AT 1450°F TO 1500°F. OIL QUENCH. TEMPER 20 MINUTES TO HARDNESS SPECIFIED. HEAT TREATMENT METHOD IS FOR GUIDANCE, EXCEPT THAT TEMPERING TIME SHALL NOT BE REDUCED BELOW THAT SPECIFIED.
3. MIL-W-13855 APPLIES. (B)
4. FINISH 5.3.1.2 OF MIL-STD-171.

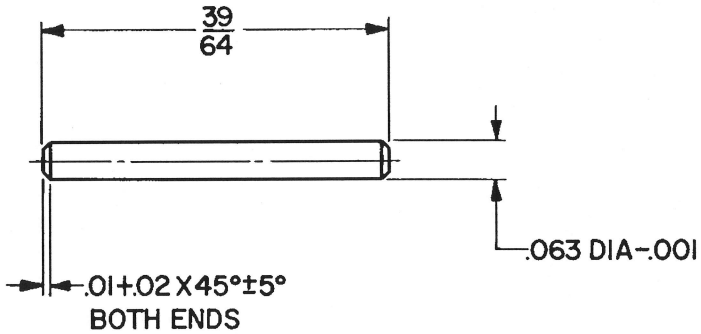

(B)

CODE IDENT NO. 19204 (B)

PART NO. 5013203

D12006342	PISTOL, M15		
	PISTOL, M1911A1		
F7790428	NATL MATCH		
D6508389	PISTOL, M1911A1		
NEXT ASSY	USED ON		
APPLICATION			
DO NOT ~~DO~~	APPLY PART NO. ~~AS SPECIFIED~~		

PHYSICAL PROPERTIES	
YP	
TS	
EL2	
RA	
BH	
RH	C34.5 T041

UNLESS OTHERWISE SPECIFIED
DIMENSIONS ARE IN INCHES
TOLERANCES ON FRACTIONS ±1/64 DECIMALS ANGLES

MATERIAL: TOOL STEEL, DRILL ROD, SPEC QQ-T-580

HEAT TREATMENT: SEE NOTE 2

FINAL PROTECTIVE FINISH: SEE NOTE 4

ORIGINAL DATE OF DRAWING 1 MAY 28

DRAFTSMAN C.S.S. CHECKER L.S.C.
TRACER R.A.P. CHECKER A.J.S.
ENGR H.E. Sibley ENGR
SUBMITTED ORD CORPS
APPROVED BY ORDER OF THE CHIEF OF ORDNANCE LT COL ORD CORPS

PIN, EJECTOR

SCALE 4/1 UNIT WT .0004 LB

DEPT OF THE ARMY
ROCK ISLAND ARSENAL
ROCK ISLAND, ILL., 61201

DWG SIZE B 5013203

SHEET 1 OF 1

DD FORM 1 APR 64 1176

B5013204

REVISIONS			
SYM	DESCRIPTION	DATE	APPROVAL
A		21FEB57	
B	REDRAWN AND REVISED SEE EO SA 26316	27NOV62	
C	(3) SEE ERR HQR 30687-2	19JUN73	
D	NORWOS2002 81-02-26	82-01-15	
E	REDRAWN W/CHANGE NOR W4S2049/840719 (ECP W4S2067/841224)	870621	

NOTES:

1. MANUFACTURE IN ACCORDANCE WITH TYPE I, GRADE A, MIL-S-13572. (C)

DIAMETER OF WIRE	.0260	
DIAMETER OF COIL (OD)	.207 ±.005	
FREE LENGTH	1.70	REF
ACTIVE COILS	38	REF
TOTAL COILS	40	REF
DIRECTION OF HELIX	OPTIONAL	
LOAD AT COMPRESSED LENGTH OF 1.36	1.030 LB ± 0.135 LB	
LOAD AT COMPRESSED LENGTH OF	LB ± LB	
SPRING RATE	3.0	LB/IN REF
SOLID LENGTH	1.066	MAX
TYPE OF ENDS	SQUARED AND GROUND	

SPECIAL DATA

HOLE DIA INTO WHICH SPRING FITS FREELY .219 MIN

ROD DIA OVER WHICH SPRING SLIDES FREELY .150 MAX*

CRIMP ONE END COIL TO .135 + .010 I D

*EXCEPT FOR CRIMPED END.

CURRENT DESIGN ACTIVITY CAGE CODE 19200
U.S. ARMY
ARMAMENT RESEARCH, DEVELOPMENT AND ENGINEERING CENTER
PICATINNY ARSENAL, NEW JERSEY 07806-5000

PART NO. 5013204

CAGE CODE 19205

(USED WITH PIN-6008599)

(C)

NEXT ASSY	USED ON
F7791295	PISTOL, M9IIA
[illegible]	NATL MATCH
F7265655	PISTOL, M9IIA
F12006306	PISTOL, M15

APPLICATION

DO NOT APPLY PART NO.

PHYSICAL PROPERTIES: YP, TS, ELS, RA, BH, RH

UNLESS OTHERWISE SPECIFIED DIMENSIONS ARE IN INCHES TOLERANCES ON FRACTIONS DECIMALS ANGLES

MATERIAL: MUSIC WIRE, STEEL, FED.SPEC QQ-W-470

HEAT TREATMENT STRESS RELIEVE AT 450 °F FOR 20 MIN, AFTER FORMING

FINAL PROTECTIVE FINISH

ORIGINAL DATE OF DRAWING 1 MAY 28

DRAFTSMAN REK CHECKER HES

TRACER E.O.J. CHECKER [illegible]

ENGR [illegible] ENGR [illegible]

SUBMITTED [illegible]

APPROVED BY ORDER OF THE CHIEF OF ORDNANCE [illegible] LT COL ORD CORPS

SPRING, FIRING PIN

SCALE

UNIT WT .0033 LB

DEPT OF THE ARMY
SPRINGFIELD ARMORY
SPRINGFIELD, MASS.

DWG SIZE B

5013204

SHEET 1 OF 1

RMH

DRAWING SIZE C

REVISIONS				
ZONE	LTR	DESCRIPTION	DATE (YR MO DA)	APPROVED
	H	REDRAWN W/CHANGE NOR GIS3140, 91-10-02	911031	SR

NOTES:
1. FINISH ALL OVER 125√.
2. STEEL, CARBON: SAE 1060 OR 1070: ASTM A108 OR STEEL, SAE 4140 OR 4150: ASTM A304.
3. CLASSIFICATION AND INSPECTION OF INVESTMENT CASTINGS TO BE IN ACCORDANCE WITH CLASS 1, GRADE B, MIL-C-6021.
4. HEAT AT 1520°F TO 1560°F. OIL QUENCH. TEMPER AT APPROXIMATELY 750°F FOR ONE HOUR TO HARDNESS SPECIFIED. HEAT TREATMENT METHOD IS FOR GUIDANCE, EXCEPT THAT TIME AT TEMPERATURE SHALL NOT BE REDUCED BELOW THAT SPECIFIED.
5. FINISH 5.3.1.2 OF MIL-STD-171.
6. MIL-W-13855 APPLIES.

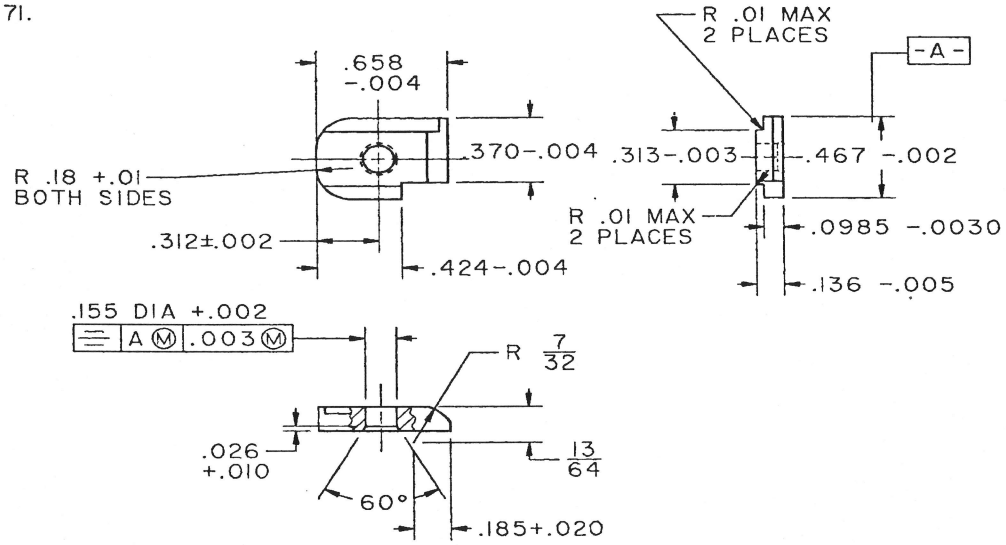

CURRENT DESIGN ACTIVITY CAGE CODE 19200
U.S. ARMY
ARMAMENT RESEARCH, DEVELOPMENT AND ENGINEERING CENTER
PICATINNY ARSENAL, NEW JERSEY 07806-5000

THIS DRAWING HAS BEEN GENERATED ON A CAD SYSTEM LOCATED AT ARDEC, PICATINNY ARSENAL, N.J. CHANGES MUST BE INCORPORATED VIA THIS SYSTEM.

PART NO. 5013205

PMIC			DO NOT SCALE DRAWING	CONTRACT NUMBER	DEPT OF THE ARMY SPRINGFIELD ARMORY SPRINGFIELD, MASS
			UNLESS OTHERWISE SPECIFIED DIMENSIONS ARE IN INCHES TOLERANCES ON DECIMAL 2 PL ± 3 PL ± FRACTION ±1/64 ANGLE ± 5°	CONTRACTOR	STOP, FIRING PIN
MECHANICAL PROPERTIES	B12006315	PISTOL, M15	THIRD ANGLE PROJECTION	DRAWN BY C.R.R. / DATE(YR-MO-DA) 280501	
YP	F7791205	PISTOL, M911A1		CHECKER R.A. / ENGINEER E. WINTER	
TS		NATL MATCH			
EL2					
RA	F7265655	PISTOL, M911A1		DRAWING APPROVAL E. WINTER	SIZE C / CAGE CODE 19205 / 5013205
BH	NEXT ASSY	USED ON	MATL ENGR / CADDS REV - 263	DESIGN APPROVAL A. A. COLE	SCALE 2/1 / UNIT WT. / SHEET
RH C43.5 TO 50	APPLICATION				

SMCAR FORM 67, 1 DEC 87(TEMP), REPLACES SMCAR FORM 67, 1 MAR 87(TEMP), WHICH MAY BE USED UNTIL EXHAUSTED

FORM 1 APR 54 1176

NOTICE: When Government drawings, specifications, or other data are used for any purpose other than in connection with a definitely related Government procurement operation, the United States Government thereby incurs no responsibility nor any obligation whatsoever; and the fact that the Government may have formulated, furnished, or in any way supplied the said drawings, specifications, or other data is not to be regarded by implication or otherwise or in any manner licensing the holder or any other person or corporation, or conveying any rights or permission to manufacture, use, or sell any patented invention that may in any way be related thereto.

B5013206

REVISIONS			
SYM	DESCRIPTION	DATE	APPROVAL
5	← →	4 APR 52	
A	REDRAWN AND REVISED WAS "A" SIZE, SEE EO SA 26316	27NOV62	
B	(3) SEE ERR HQR 30687-2	19JUN73	E Winter
C	(1) SEE ERR HQR 50605	10FEB75	
D	REDRAWN W/CHANGE NOR W4S2049/840719 (ECP W4S2067/841224)	870621	

NOTES:

1. FINISH 125√ ALL OVER. (C)
2. HEAT TREATMENT: HEAT AT 1450° TO 1500°F; OIL QUENCH. TEMPER 20 MINUTES AT HEAT TO HARDNESS SPECIFIED. HEAT TREATMENT METHOD IS FOR GUIDANCE, EXCEPT THAT TEMPERING TIME SHALL NOT BE REDUCED BELOW THAT SPECIFIED.
3. MIL-W-13855 APPLIES.
4. FINISH 5.3.1.2 OF MIL-STD-171.

(B)

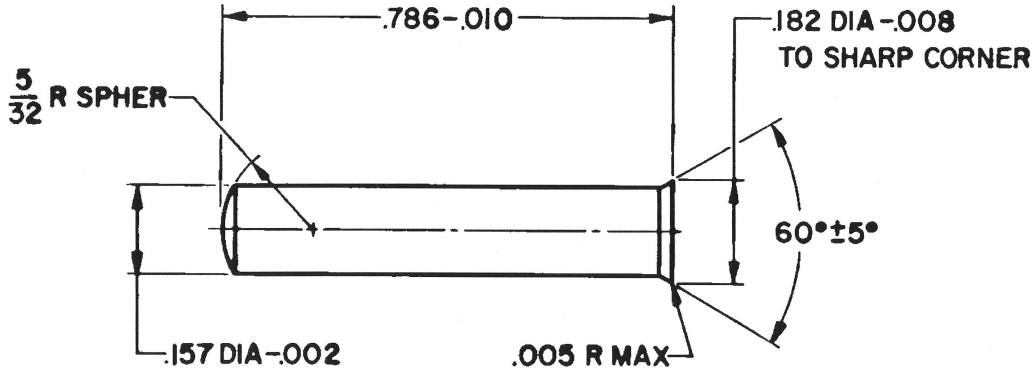

CURRENT DESIGN ACTIVITY CAGE CODE 19200
U.S. ARMY
ARMAMENT RESEARCH, DEVELOPMENT AND ENGINEERING CENTER
PICATINNY ARSENAL, NEW JERSEY 07806-5000

(B)

PART NO. 5013206

CAGE CODE 19205

		PHYSICAL PROPERTIES	
F7791205	PISTOL, M911A1	YP	
	NATL MATCH	TS	
F7265655	PISTOL, M911A1	EL2	
B12006312	PISTOL, M15	RA	
NEXT ASSY	USED ON	BH	
APPLICATION		RH	C48 / TO 52
DO NOT ~~DO~~	APPLY PART NO. ~~AS SPECIFIED~~		

UNLESS OTHERWISE SPECIFIED
DIMENSIONS ARE IN INCHES
TOLERANCES ON FRACTIONS ±1/64 DECIMALS ANGLES
MATERIAL: TOOL STEEL, DRILL ROD, SPEC QQ-T-580
HEAT TREATMENT SEE NOTE 2
FINAL PROTECTIVE FINISH: SEE NOTE 4

ORIGINAL DATE OF DRAWING 1 MAY 28
DRAFTSMAN C.S.S. CHECKER L.S.C.
TRACER R.A.P. CHECKER A.J.
ENGR R.E.Sibel ENGR
SUBMITTED V A Zunkkonen ORD CORPS
APPROVED BY ORDER OF THE CHIEF OF ORDNANCE: LT COL ORD CORPS

PIN, HAMMER

SCALE 4/1 UNIT WT .004 LB

DEPT OF THE ARMY
SPRINGFIELD ARMORY
SPRINGFIELD, MASS.

DWG SIZE B 5013206
SHEET 1 OF 1

DD FORM 1 APR 54 1176

NOTICE — When Government drawings, specifications or other data are used for any purpose other than in connection with a definitely related Government procurement operation, the United States Government thereby incurs no responsibility nor any obligation whatsoever; and the fact that the Government may have formulated, furnished, or in any way supplied the said drawings, specifications, or other data is not to be regarded by implication or otherwise as in any manner licensing the holder or any other person or corporation, or conveying any rights or permission to manufacture, use, or sell any patented invention that may in any way be related thereto.

B5013207

REVISIONS			
SYM	DESCRIPTION	DATE	APPROVAL
4	← →	19 MAY 49	
A	REDRAWN AND REVISED WAS "A" SIZE, SEE EO SA 26316	27 NOV 62	
B	(3) SEE ERR HQR 30687-2	19 JUN 73	E. Winter
C	(1) SEE ERR HQR 50605	10 FEB 75	
D	REDRAWN W/CHANGE NOR W4S2049/840719 (ECP W4S2067/841224)	870621	

NOTES:

1. FINISH 125 ALL OVER.
2. HEAT TREATMENT: HEAT AT 1450° TO 1500°F; OIL QUENCH. TEMPER 20 MINUTES TO HARDNESS SPECIFIED. HEAT TREATMENT METHOD IS FOR GUIDANCE, EXCEPT THAT TEMPERING TIME SHALL NOT BE REDUCED BELOW THAT SPECIFIED.
3. FINISH 5.3.1.2 OF MIL-STD-171.
4. MIL-W-13855 APPLIES.

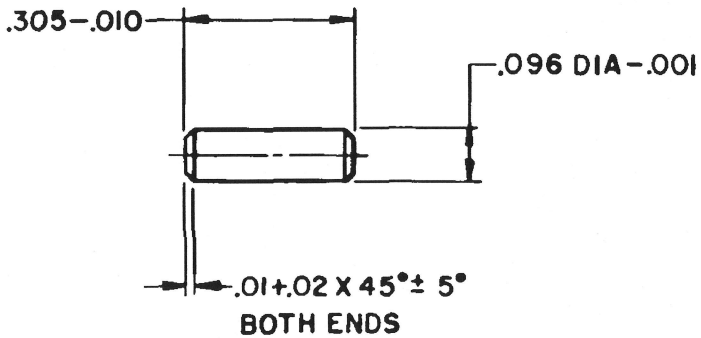

CURRENT DESIGN ACTIVITY CAGE CODE 19200
U.S. ARMY
ARMAMENT RESEARCH, DEVELOPMENT AND ENGINEERING CENTER
PICATINNY ARSENAL, NEW JERSEY 07806-5000

PART NO. 5013207

CAGE CODE 19205

		PHYSICAL PROPERTIES	
F7791205	PISTOL, M911A1	YP	
	NATL MATCH	TS	
F7265655	PISTOL, M911A1	EL2	
F12006306	PISTOL, M15	RA	
NEXT ASSY	USED ON	BH	
APPLICATION		RH	C39.5
DO NOT ~~DO~~	APPLY PART NO. ~~AS SPECIFIED~~		T046

UNLESS OTHERWISE SPECIFIED
DIMENSIONS ARE IN INCHES
TOLERANCES ON FRACTIONS DECIMALS ANGLES

MATERIAL: TOOL STEEL, DRILL ROD, SPEC QQ-T-580

HEAT TREATMENT: SEE NOTE 2

FINAL PROTECTIVE FINISH: SEE NOTE 3

ORIGINAL DATE OF DRAWING 1 MAY 28

DRAFTSMAN S.E.L. CHECKER L.S.C.
TRACER M.F. CHECKER
ENGR E.Siebel ENGR
SUBMITTED ORD CORPS
APPROVED BY ORDER OF THE CHIEF OF ORDNANCE LT COL ORD CORPS

PIN, HAMMER STRUT

SCALE 4/1 UNIT WT .0006LB

DEPT OF THE ARMY
SPRINGFIELD ARMORY
SPRINGFIELD, MASS.

DWG SIZE B 5013207

SHEET 1 OF 1

RMH

DRAWING SIZE B
(ARRADCOMR 70-12)

REVISIONS			
SYM	DESCRIPTION	DATE	APPROV
E	REDRAWN W/CHANGE NOR W4S2049/840719 (ECP W4S2067/841224)	870621	

NOTES:-

1-MATERIAL:-WIRE, MUSIC, STEEL, SPEC QQ-W-470.
2-HEAT TREATMENT:-STRESS RELIEVE AT 450°F FOR 20 MINUTES, MINIMUM.
3-ROD DIA OVER WHICH SPRING SLIDES FREELY---.174 MAX*
4-CRIMP BOTH END COILS .160 + .008 ID.
5-MANUFACTURE IN ACCORDANCE WITH TYPE I, GRADE A, MIL-S-13572.

WIRE DIAMETER	.045
COIL DIAMETER (OD)	.273-.003
FREE LENGTH	2.156
TOTAL COILS	21.5 REF
DIRECTION OF HELIX	L.H.
LOAD AT COMPRESSED LENGTH OF	1.312= 22.0±2.0 LBS
LOAD AT COMPRESSED LENGTH OF	1.062= 29.5±2.0 LBS
SPRING RATE	27.69 LBS
SOLID LENGTH	.968
TYPE OF ENDS	CLOSED & GROUND

*EXCEPT FOR CRIMPED ENDS: CHECK AT A STAGE OF MANUFACTURE OR BY CUTTING OFF CRIMP IN SAMPLE.

(USED WITH CAP-5013209)

CURRENT DESIGN ACTIVITY CAGE CODE 19205
U.S. ARMY
ARMAMENT RESEARCH, DEVELOPMENT AND ENGINEERING CE
PICATINNY ARSENAL, NEW JERSEY 07806-5000

PART NO. 5013208

NEXT ASSY	USED ON
C12006347	PISTOL, M15
F7791205	PISTOL, M911A1 NATL MATCH
F7265655	PISTOL, M911A1

APPLICATION

MECHANICAL PROPERTIES: YP, TS, EL2, RA, SH, RH

CADDS REV. ——

DO NOT SCALE DRAWING

UNLESS OTHERWISE SPECIFIED DIMENSIONS ARE IN INCHES

TOLERANCES ON DECIMALS ±
FRACTIONS ± ANGLES ±

ORIGINAL DATE OF DRAWING 28-05-01

DRAFTSMAN CAD- G.S.S. CHECKER M.E.K.
ENGR G.L.RANDOZZO ENGR D.L.WILSON
ENGR D.R.ASH ENGR

PHILIP E. HEBERLE

R.S.HENRY

DEPT OF THE ARMY
SPRINGFIELD ARMORY SPRINGFIELD, MASS

SPRING, HELICAL COMPRESSION

SIZE B | CAGE CODE 19205 | 5013208

SCALE —— | UNIT WT. | SHEET 1 OF

ARRADCOM FORM AUG 77 REPLACES SARPA FORM 1038 OCT 76 WHICH MAY BE USED UNTIL EXHAUSTED

NOTES:

1. FINISH 125 ALL OVER.
2. HEAT TREATMENT: CARBURIZE TO CASE DEPTH.003 TO .005. OIL QUENCH. TEMPER AT 350°F MINIMUM FOR 30 MINUTES. HEAT TREATMENT METHOD IS FOR GUIDANCE, EXCEPT THAT CASE DEPTH AND HARNESS REQUIREMENTS ARE MANDATORY AND TIME AT TEMPERATIRE SHALL NOT BE REDUCED BELOW THAT SPECIFIED.
3. MATERIAL: STEEL, CARBON, SAE 1018 THRU 1020, 1117: ASTM A108 OR ASTM A576
4. MIL-W-13855 APPLIES.

REVISIONS

ZONE	LTR	DESCRIPTION	DATE (YR MO DA)	APPROVE
	E	REDRAWN W/CHANGE NOR W4S2049/840719 (ECP W4S2067/841224)	870621	ORPY

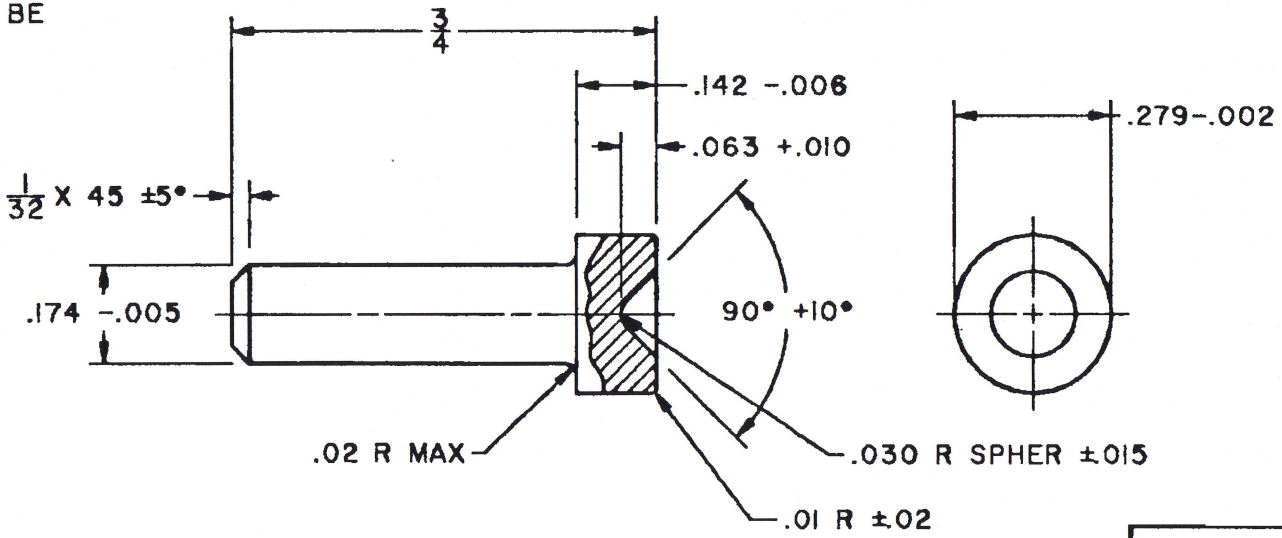

THIS DRAWING HAS BEEN GENERATED ON A CAD SYSTEM LOCATED AT ARDEC, PICATINNY ARSENAL, N.J. CHANGES MUST BE INCORPORATED VIA THIS SYSTEM.

CURRENT DESIGN ACTIVITY CAGE CODE 19200
U.S. ARMY
ARMAMENT RESEARCH, DEVELOPMENT AND ENGINEERING CENTER
PICATINNY ARSENAL, NEW JERSEY 07806-5000

PART NO. 5013209

PMIC

MECHANICAL PROPERTIES

YP	
TS	
EL2	
RA	
BH	
RH	FILE HARD

C12006347	PISTOL, M15
F7791205	PISTOL, M911A1
	NATL MATCH
F7265655	PISTOL, M911A1
NEXT ASSY	USED ON
APPLICATION	

DO NOT SCALE DRAWING

UNLESS OTHERWISE SPECIFIED DIMENSIONS ARE IN INCHES
TOLERANCES ON

DECIMAL	FRACTION
2 PL ±	±1/64
3 PL ±	

THIRD ANGLE PROJECTION

MATL ENGR

CADDS REV - 230

CONTRACT NUMBER

CONTRACTOR

DRAWN BY E.G.D.	DATE(YR-MO-DA) 28-06-01
CHECKER L.S.C.	ENGINEER H.E.S.
DRAWING APPROVAL V. A. LUUKKONEN	
DESIGN APPROVAL S. C. SHULTZ	

DEPT OF THE ARMY
SPRINGFIELD ARMORY
SPRINGFIELD MASS

CAP, MAINSPRING

SIZE	CAGE CODE	
B	19205	5013209

SCALE	UNIT WT.	SHEET
4/1	.006 LB	1 OF 1

SMCAR FORM 66, 1 MAR 88(TEMP) REPLACES SMCAR FORM 66, 1 JUL 87(TEMP) WHICH MAY BE USED UNTIL EXHAUSTED

REVISIONS				
ZONE	LTR	DESCRIPTION	DATE (YR MO DA)	APPROVE
	E	REDRAWN W/CHANGE NOR W4S2049/840719 (ECP W4S2067/841224)	870621	EM ORFT

NOTES:

1. FINISH 125 ✓ ALL OVER.
2. HEAT TREATMENT: CARBURIZE TO CASE DEPTH .003 TO .005. OIL QUENCH. TEMPER AT 350°F MINIMUM TO HARDNESS SPECIFIED. HEAT TREATMENT METHOD IS FOR GUIDANCE, EXCEPT THAT CASE DEPTH AND HARDNESS REQUIREMENTS ARE MANDATORY AND TIME AT TEMPERATURE SHALL NOT BE REDUCED BELOW THAT SPECIFIED.
3. MIL-W-13855 APPLIES.
4. MATERIAL: STEEL, CARBON: SAE 1018 THRU 1020, 1117: ASTM A108 OR ASTM A576
5. FINISH 5.3.1.2 OF MIL-STD-171.

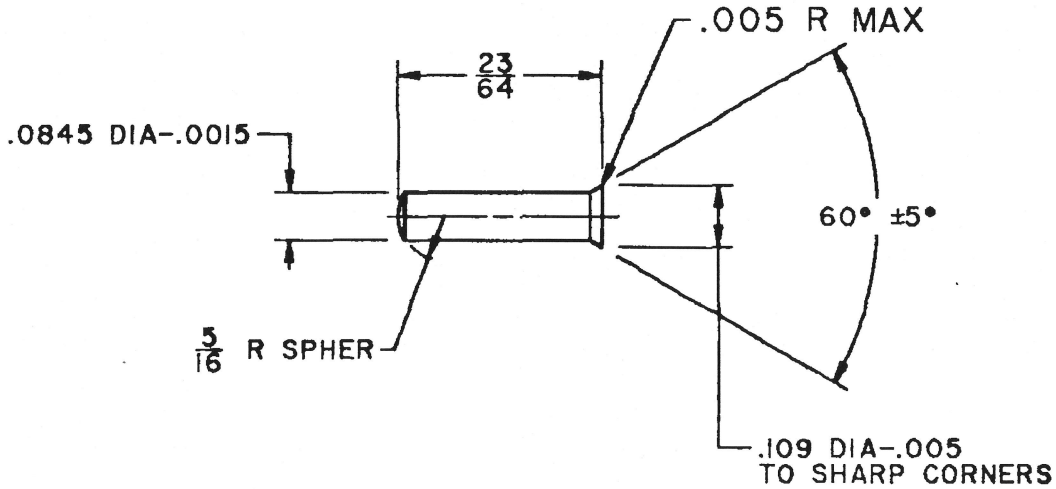

CURRENT DESIGN ACTIVITY CAGE CODE 19200
U.S. ARMY
ARMAMENT RESEARCH, DEVELOPMENT AND ENGINEERING CENTER
PICATINNY ARSENAL, NEW JERSEY 07806-5000

THIS DRAWING HAS BEEN GENERATED ON A CAD SYSTEM LOCATED AT ARDEC, PICATINNY ARSENAL, N.J. CHANGES MUST BE INCORPORATED VIA THIS SYSTEM.

PART NO. 5013210

PMIC			
MECHANICAL PROPERTIES			
YP			
TS			
EL2			
RA			
BH			
RH	FILE HARD		
		A12006310	PISTOL, M15
		F7791205	PISTOL, M9IIA1
			NATL MATCH
		F7265655	PISTOL, M9IIA1
		NEXT ASSY	USED ON
		APPLICATION	

DO NOT SCALE DRAWING

UNLESS OTHERWISE SPECIFIED DIMENSIONS ARE IN INCHES

TOLERANCES ON	
DECIMAL	FRACTION
2 PL ±	±1/64
3 PL ±	

THIRD ANGLE PROJECTION

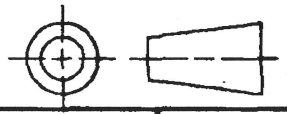

MATL ENGR

CADDS REV - 230

CONTRACT NUMBER

CONTRACTOR

DRAWN BY S.E.L.	DATE(YR-MO-DA) 28-06-01
CHECKER L.S.C.	ENGINEER H.E.S.
DRAWING APPROVAL V. A. LUUKKONEN	
DESIGN APPROVAL S. C. SHULTZ	

DEPT OF THE ARMY
SPRINGFIELD ARMORY
SPRINGFIELD, MASS

PIN
MAINSPRING CAP

SIZE	CAGE CODE	
B	19205	5013210

SCALE 4/1 | UNIT WT. .0005 LB | SHEET 1 OF 1

SMCAR FORM 66, 1 MAR 88(TEMP) REPLACES SMCAR FORM 66, 1 JUL 87(TEMP) WHICH MAY BE USED UNTIL EXHAUSTED

ORI

00 FORM 1 APR 54 1176

NOTICE: When Government drawings, specifications, or other data are used for any purpose other than in connection with a definitely related Government procurement operation, the United States Government thereby incurs no responsibility nor any obligation whatsoever; and the fact that the Government may have formulated, furnished, or in any way supplied the said drawings, specifications or other data is not to be regarded by implication or otherwise as in any manner licensing the holder or any other person or corporation, or conveying any rights or permission to manufacture, use, or sell any patented invention that may in any way be related thereto.

B5013211

REVISIONS			
SYM	DESCRIPTION	DATE	APPROVAL
5	← →	4 APR 52	
A	REDRAWN AND REVISED WAS "A" SIZE, SEE 50 SA 26316	27NOV62	
B	(3) SEE ERR HQR 30687-2	19 JUN73	E. Winter
C	(2) SEE ERR HQR 50605	10FEB75	
D	REDRAWN W/ CHANGE NOR W4S2049/ 840719 (ECP W4S2067/ 841224)	870621	

NOTES:

1. FINISH 125 ALL OVER. (C)
2. HEAT TREATMENT: HEAT AT 1450° TO 1500°F; OIL QUENCH. TEMPER 20 MINUTES AT HEAT TO HARDNESS SPECIFIED. HEAT TREATMENT METHOD IS FOR GUIDANCE EXCEPT THAT TEMPERING TIME SHALL NOT BE REDUCED BELOW THAT SPECIFIED. (B)
3. MIL-W-13855 APPLIES.
4. FINISH 5.3.1.2 OF MIL-STD-171. (C)

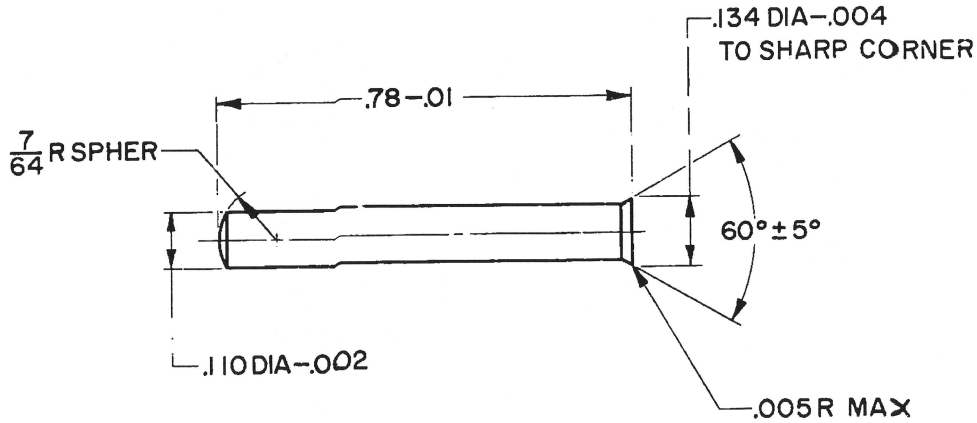

CURRENT DESIGN ACTIVITY CAGE CODE 19200
U.S. ARMY
ARMAMENT RESEARCH, DEVELOPMENT AND ENGINEERING CENTER
PICATINNY ARSENAL, NEW JERSEY 07806-5000

CAGE CODE 19205

PART NO. 5013211

(B)

		PHYSICAL PROPERTIES	
F7791205	PISTOL, M911A1	YP	
	NATL MATCH	TS	
F7265655	PISTOL, M911A1	EL2	
B12006307	PISTOL, M15	RA	
NEXT ASSY	USED ON	BH	
APPLICATION		RH	C48 TO 52
DO NOT ~~DO~~	APPLY PART NO. ~~AS SPECIFIED~~		

UNLESS OTHERWISE SPECIFIED
DIMENSIONS ARE IN INCHES
TOLERANCES ON FRACTIONS DECIMALS ANGLES

MATERIAL: TOOL STEEL, DRILL ROD, SPEC QQ-T-580

HEAT TREATMENT: SEE NOTE 2

FINAL PROTECTIVE FINISH: SEE NOTE 4

ORIGINAL DATE OF DRAWING 1 MAY 28

DRAFTSMAN S.E.L. CHECKER S.C.
TRACER E.D.L. CHECKER R.J.S.
ENGR R.E.Sill ENGR
SUBMITTED D.A. Zumbekomen ORD CORPS
APPROVED BY ORDER OF THE CHIEF OF ORDNANCE J.C. Weber LT COL ORD CORPS

PIN, SEAR

SCALE 4/1 UNIT WT .002 LB

DEPT OF THE ARMY
SPRINGFIELD ARMORY
SPRINGFIELD, MASS

DWG SIZE B 5013211

SHEET 1 OF 1

RMH

00 FORM 1 APR 54 1176

B5013212

REVISIONS			
SYM	DESCRIPTION	DATE	APPROVAL
4	← →	5 APR 52	
A	REDRAWN AND REVISED WAS "A" SIZE, SEE EO SA 26316	27NOV62	
B	(3) SEE ERR HQR 30687-2	19JUN73	E. Newton
C	(2) SEE ERR HQR 50605	10FEB75	
D	REDRAWN W/ CHANGE NOR W4S2049 / 840719 (ECP W4S2067 / 841224)	870621	

NOTES:

1. FINISH 125 ALL OVER. (C)
2. HEAT TREATMENT: HEAT AT 1450°TO 1500°F; OIL QUENCH. TEMPER 20 MINUTES AT HEAT TO HARDNESS SPECIFIED. HEAT TREATMENT METHOD IS FOR GUIDANCE, EXCEPT THAT TEMPERING TIME SHALL NOT BE REDUCED BELOW THAT SPECIFIED.
3. MIL-W-13855 APPLIES.
4. FINISH 5.3.1.2 OF MIL-STD-171. (C)

(B)

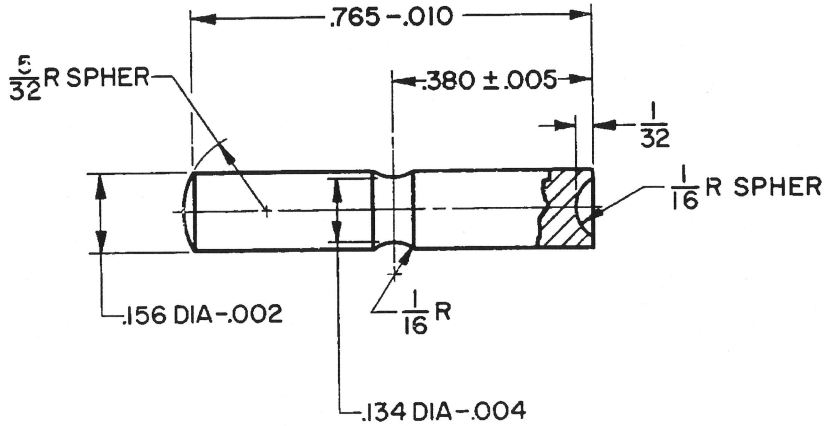

CURRENT DESIGN ACTIVITY CAGE CODE 19205
U.S. ARMY
ARMAMENT RESEARCH, DEVELOPMENT AND ENGINEERING CENTER
PICATINNY ARSENAL, NEW JERSEY 07806-5000

CAGE CODE 19205

PART NO. 5013212

(B)

		PHYSICAL PROPERTIES	
F7791205	PISTOL, M911A1 NATL MATCH	YP	
		TS	
F7265655	PISTOL, M911A1	EL2	
		RA	
B1200631	PISTOL, M15	BH	
NEXT ASSY	USED ON		
APPLICATION		RH	C43.5 TO 50
DO NOT ~~DO~~	APPLY PART NO. ~~AS SPECIFIED~~		

UNLESS OTHERWISE SPECIFIED
DIMENSIONS ARE IN INCHES
TOLERANCES ON FRACTIONS ±1/64 DECIMALS ANGLES
MATERIAL: TOOL STEEL, DRILL ROD, SPEC QQ-T-580
HEAT TREATMENT SEE NOTE 2
FINAL PROTECTIVE FINISH: SEE NOTE 4

ORIGINAL DATE OF DRAWING 1 MAY 28
DRAFTSMAN G.S.S. CHECKER L.S.C.
TRACER E.F.S. CHECKER
ENGR
SUBMITTED ORD CORPS
APPROVED BY ORDER OF THE CHIEF OF ORDNANCE LT COL ORD CORPS

PIN, MAINSPRING HOUSING

SCALE: 4/1 UNIT WT .004 LB

DEPT OF THE ARMY
SPRINGFIELD ARMORY
SPRINGFIELD, MASS

DWG SIZE B 5013212
SHEET 1 OF 1

RMH

REVISIONS				
ZONE	LTR	DESCRIPTION	DATE (YR MO DA)	APPROVED
	F	REDRAWN W/CHANGE NOR W4S2049/840719 (ECP W4S2067/841224)	870621	ORFI

NOTES:

1. FINISH 125 ✓ ALL OVER.
2. CARBURIZE AT 1575° TO 1600°F TO CASE DEPTH .002 TO .005 OIL QUENCH. TEMPER AT 350°F FOR 30 MINUTES. HEAT TREATMENT METHOD IS FOR GUIDANCE, EXCEPT THAT CASE DEPTH AND HARDNESS REQUIREMENTS ARE MANDATORY AND TIME AT TEMPERATURE SHALL NOT BE REDUCED BELOW THAT SPECIFIED.
3. STEEL, CARBON, SAE 1020, 1117, ASTM A108.
4. MIL-W-13855 APPLIES.
5. FINISH 5.3.2.2 OF MIL-STD-171.

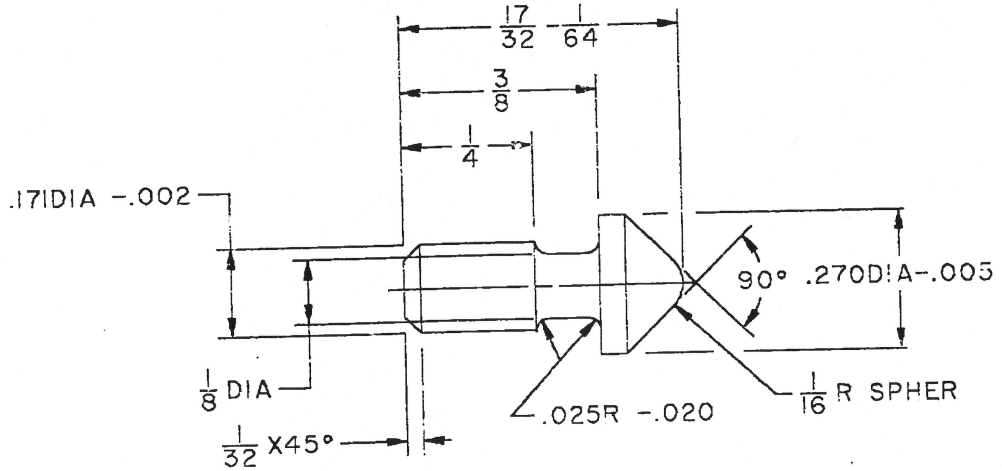

THIS DRAWING HAS BEEN GENERATED ON A CAD SYSTEM LOCATED AT ARDEC, PICATINNY ARSENAL, N.J. CHANGES MUST BE INCORPORATED VIA THIS SYSTEM.

CURRENT DESIGN ACTIVITY CAGE CODE 19200
U.S. ARMY
ARMAMENT RESEARCH, DEVELOPMENT AND ENGINEERING CENTER
PICATINNY ARSENAL, NEW JERSEY 07806-5000

PART NO. 5013213

PMIC			DO NOT SCALE DRAWING	CONTRACT NUMBER
			UNLESS OTHERWISE SPECIFIED DIMENSIONS ARE IN INCHES	CONTRACTOR
MECHANICAL PROPERTIES			TOLERANCES ON DECIMAL / FRACTION	
	F7791205	PISTOL, M911A1	2 PL ± / ±1/64	DRAWN BY F.C.L. / DATE(YR-MO-DA) 28-06-01
YP		NATL MATCH	3 PL ± / ANG±5°	
TS			THIRD ANGLE PROJECTION	CHECKER L.S.C. / ENGINEER H.E.S.
EL2	F7265655	PISTOL, M911A1		DRAWING APPROVAL V. A. LUUKKONEN
RA	C12006347	PISTOL, M15		
BH	NEXT ASSY	USED ON	MATL ENGR / CADDS REV - 230	DESIGN APPROVAL S. C. SHULTZ
RH	FILE HARD	APPLICATION		

DEPT OF THE ARMY
SPRINGFIELD ARMORY
SPRINGFIELD, MASS

RETAINER, HOUSING PIN

SIZE	CAGE CODE	
B	19205	5013213

SCALE 4/1 | UNIT WT. .0032 LB | SHEET 1 OF 1

ORFI

SMCAR FORM 66, 1 MAR 88(TEMP) REPLACES SMCAR FORM 66, 1 JUL 87(TEMP) WHICH MAY BE USED UNTIL EXHAUSTED

NOTES: -125
1. FINISH ✓ ALL OVER.
2. FINAL PROTECTIVE FINISH: FINISH 5.3.1.2 OF MIL-STD-171
3. MATERIAL: STEEL, CARBON, SAE 1010 THRU 1020, 1117: ASTM A108 OR ASTM A576
4. MIL-W-13855 APPLIES.

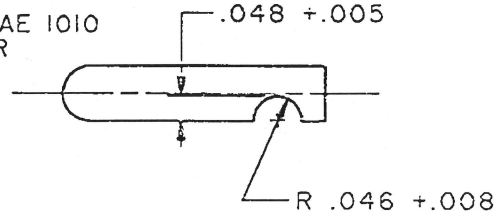

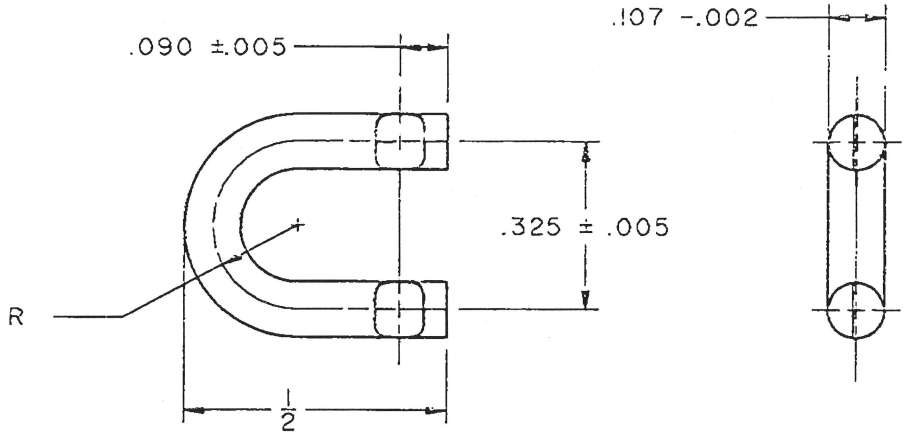

REVISIONS				
ZONE	LTR	DESCRIPTION	DATE (YR MO DA)	APPROVED
	F	REDRAWN W/CHANGE NOR W4S2049/840719 (ECP W4S2067/841224) (ECP W5S0141/851218)	870621	ORFI

CURRENT DESIGN ACTIVITY CAGE CODE 19200
U.S. ARMY
ARMAMENT RESEARCH, DEVELOPMENT AND ENGINEERING CENTER
PICATINNY ARSENAL, NEW JERSEY 07806-5000

THIS DRAWING HAS BEEN GENERATED ON A CAD SYSTEM LOCATED AT ARDEC, PICATINNY ARSENAL, N.J. CHANGES MUST BE INCORPORATED VIA THIS SYSTEM.

PART NO. 5013214

PMIC		
MECHANICAL PROPERTIES		
YP		
TS		
EL2		
RA		
BH		
RH		

NEXT ASSY	USED ON
	PISTOL, M911A
	NATL MATCH
B5564058	PISTOL, M911A
B12006349	PISTOL, M15
APPLICATION	

DO NOT SCALE DRAWING

UNLESS OTHERWISE SPECIFIED DIMENSIONS ARE IN INCHES
TOLERANCES ON

DECIMAL	FRACTION
2 PL ±	±
3 PL ±.01	

THIRD ANGLE PROJECTION

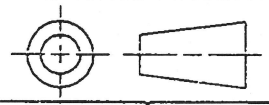

MATL ENGR

CADDS REV - 263

CONTRACT NUMBER

CONTRACTOR

DRAWN BY	DATE(YR-MO-DA)
C.S.S.	28-05-01
CHECKER L.S.C.	ENGINEER W. GRANT

DRAWING APPROVAL
V. A. LUUKKONEN

DESIGN APPROVAL
S. C. SHULTZ

DEPT OF THE ARMY
SPRINGFIELD ARMORY
SPRINGFIELD, MASS.

LOOP, LANYARD

SIZE	CAGE CODE	
B	19205	5013214

SCALE	UNIT WT.	SHEET
4/1	.0024 LB	

SMCAR FORM 66, 1 MAR 88(TEMP) REPLACES SMCAR FORM 66, 1 JUL 87(TEMP) WHICH MAY BE USED UNTIL EXHAUSTED

00 FORM 1 APR 54 1176

B5013215

REVISIONS			
SYM	DESCRIPTION	DATE	APPROVAL
4	← →	18 MAY 49	
A	REDRAWN AND REVISED WAS "A" SIZE, SEE EO SA 26316	27 NOV 62	
B	(2) SEE ERR HQR 30687-1	23 MAY 73	
C	NOR W3S 0046/83-09-26	840210	

NOTES:

1. FINISH 125
2. HEAT TREATMENT: HEAT AT 1450° TO 1500°F; OIL QUENCH. TEMPER 20 MINUTES TO HARDNESS SPECIFIED. HEAT TREATMENT METHOD IS FOR GUIDANCE EXCEPT THAT TEMPERING TIME SHALL NOT BE REDUCED BELOW THAT SPECIFIED.
3. MIL-W-13855 APPLIES.

B

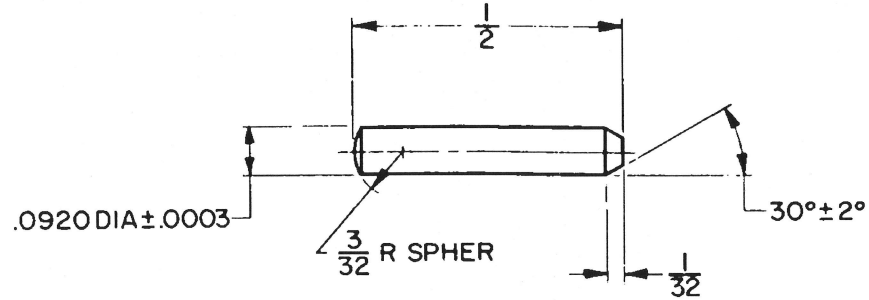

CURRENT DESIGN ACTIVITY FSCM NO. 19200
US ARMY ARMAMENT RESEARCH AND DEVELOPMENT CENTER
DOVER, NEW JERSEY 07801

CODE IDENT NO. 19204
PART NO. 5013215

B

ORIGINAL DESIGN ACTIVITY FSCM NO.

NEXT ASSY	USED ON
	PISTOL, M911A1 NATL MATCH
B5564058	PISTOL, M911A1
B12006350	PISTOL, M15

APPLICATION

DO NOT APPLY PART NO. ~~AS SPECIFIED~~

PHYSICAL PROPERTIES	
YP	
TS	
El 2	
RA	
BH	
RH	C43.5 T050

UNLESS OTHERWISE SPECIFIED
DIMENSIONS ARE IN INCHES
TOLERANCES ON FRACTIONS ± 1/64 DECIMALS ANGLES
MATERIAL: TOOL STEEL, DRILL ROD, FED. SPEC QQ-T-580
HEAT TREATMENT: SEE NOTE 2
FINAL PROTECTIVE FINISH

ORIGINAL DATE OF DRAWING 1 MAY 28
DRAFTSMAN C.S.S. CHECKER L.S.C.
TRACER E.J.J. CHECKER A.J.J.
ENGR E.S. Hill
SUBMITTED V A Lundkamm ORD CORPS
APPROVED BY ORDER OF THE CHIEF OF ORDNANCE LT COL ORD CORPS

PIN, LANYARD LOOP

SCALE 4/1 UNIT WT .0009 LB

ROCK ISLAND ARSENAL
DEPT OF THE ARMY
ROCK ISLAND, ILL. 61201

DWG SIZE B 5013215
SHEET 1 OF 1

RMH